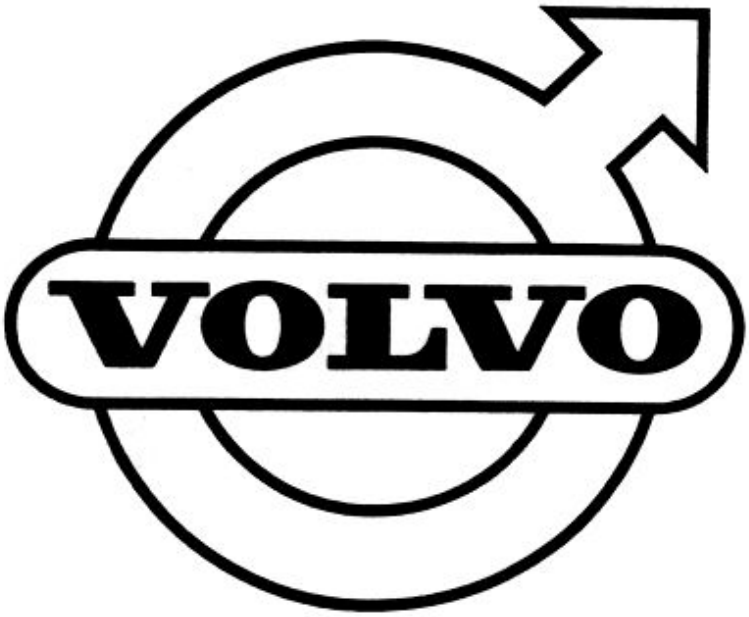
VOLVO

GRUPP 6
Framaxel Hjul Styrning

INNEHÅLLSFÖRTECKNING

Se sida 1:2

GROUP 6
Front axle Wheels Steering

INDEX

See page 1:2

INNEHÅLLSFÖRTECKNING

Framaxelbalk, spindel, länkarm, övre ..... Sida 2
Länkarm, nedre, fjäder, stötdämparsats, krängningshämmare ..... Sida 4
Nav, hjul, navkapsel, hjulring ..... Sida 6
Styrinrättning ..... Sida 10
. Styrinrättning, detaljer ..... Sida 14
Rattstång, ratttrör, pitmanarm ..... Sida 10
Ratt ..... Sida 12
Parallellstag ..... Sida 16
. Parallellstag, detaljer ..... Sida 20
Mellanarm ..... Sida 16
Styrstång, styrarm ..... Sida 18

INDEX

Front suspension cross member, steering knuckles, upper wishbones ... Page 2
Lower wishbones, springs, shock absorbers, stabilizer ..... Page 4
Hubs, wheels, hub caps, wheel rings ..... Page 6
Steering gear ..... Page 10
. Steering gear, components ..... Page 14
Steering column, drop arms ..... Page 10
Steering wheel ..... Page 12
Tie rod ..... Page 16
. Tie rod, components ..... Page 20
Steering idler arm ..... Page 16
Steering rods, steering arms ..... Page 18

ANTECKNINGAR NOTES

P 120 P 130 P 220(B18)

Framaxel, hjul — Front axle, wheels

Pos Fig.	Antal Qty. P 120	P 130	P 220	Benämning	Description	Det. nr Part No.	Anmärkning Notes
1	1	1	1	Framaxelbalk	Front suspension cross member	661600-7	
2	2	2	2	Skruv	Bolt	955562-4	~~924304~~
3	2	2	2	Låsbricka	Lock washer	672068-4	~~191411~~
4	4	4	4	Skruv	Bolt	955559-0	~~924301~~
5	2	2	2	Låsbricka	Lock washer	192126-1	
6	erf	erf	erf	Justermellanlägg, tj = 2	Shim, Th = 2	654047-0	
	erf	erf	erf	tj = 3	Th = 3	654048-8	
7	2	2	2	Spindel	Steering knuckle	653032-3	
8	2	2	2	Mutter	Nut	153042-7	
9	2	2	2	Saxpinne	Split pin S	907849-4	
10	2	2	2	Kulled	Ball joint S	653131-3	1) Lagerföres ej
11	2	2	2	. Smörjnippel	. Lubricator	190084-4	
12	2	2		Kulled	Ball joint S	672803-4	2) Lagerföres ej
12a	2	2		. Tätningshylsa	. Seal sleeve	672787-9	
13	2	2		. Gummikåpa	. Rubber boot	672788-7	
14	2	2		. Spännring	. Tensioner ring	672785-3	
15	2	2		. Låsring	. Circlip	672786-1	
16	2	2	2	Gummiskydd	Rubber boot S	89369-2	1)
17	2	2	2	Bricka	Washer S	654479-5	1)
18	4	4	4	Skruv	Bolt S	940135-7	~~921823~~
19	4	4	4	Mutter	Nut S	950353-3	~~950393~~
20	2	2	2	Länkarm, övre	Wishbone, upper	658910-5	1)
	2	2	2	Länkarm, övre	Wishbone, upper	671440-6	2)
21	2	2	2	Skruv	Bolt S	940161-3	~~921827~~
22	2	2	2	Mutter	Nut S	950353-3	~~950393~~
23	2	2	2	Gummibuffert	Rubber cushion S	83107-3	
24	2	2	2	Axel	Shaft	658043-5	
25	4	4	4	Gummibussning	Rubber bushing S	87033-7	
26	4	4	4	Hylsa	Sleeve S	653410-1	
27	4	4	4	Bricka	Washer S	120802-4	
28	4	4	4	Mutter	Nut S	950366-5	
29	4	4	4	Krampa	U-bolt	653409-3	
30	erf	erf	erf	Justermellanlägg, tj = 0,5	Shim, Th = 0.5 S	654106-4	
	erf	erf	erf	tj = 0,15	Th = 0.15 S	654107-2	
	erf	erf	erf	tj = 1,00	Th = 1.00 S	654105-6	
	erf	erf	erf	tj = 3,00	Th = 3.00 S	658769-5	
	erf	erf	erf	tj = 6,00	Th = 6.00 S	658770-3	
31	8	8	8	Mutter	Nut S	950354-1	~~950394~~
32	4	4	4	Skruv	Bolt	955550-8	~~921863~~
33	2	2	2	Låsbricka	Lock washer S	942942-4	~~191188~~

1. P 120 ch-193799.
   P 130 ch - 144399.
   P 220 ch - 29399.
2. P 120 ch 193800 -.
   P 130 ch 144400 -.
   P 220 ch 29400 -.

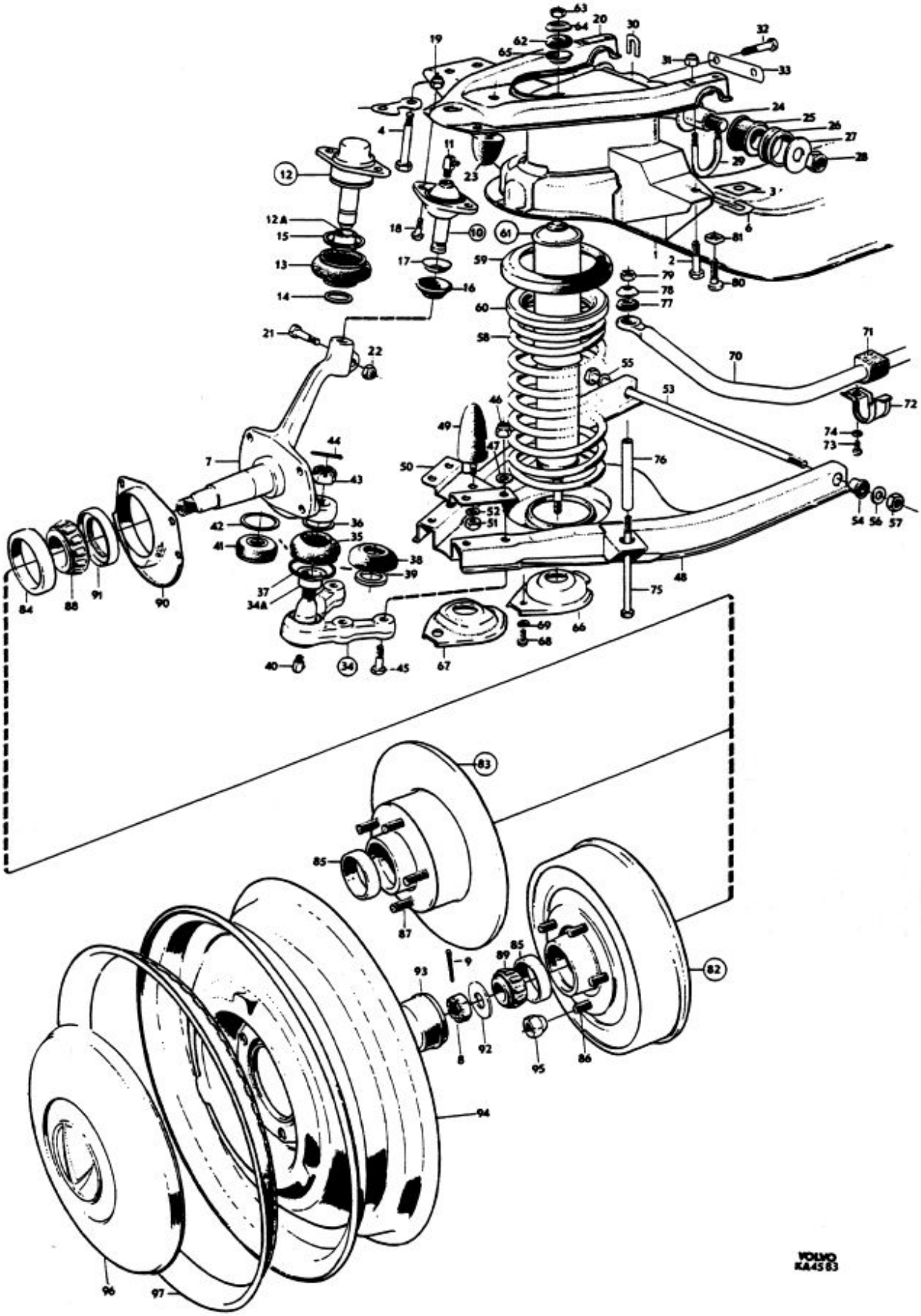
VOLVO
KA4583

P 120 P 130 P 220(B18)

Framaxel, hjul — Front axle, wheels

Pos Fig.	Antal Qty. P120	P130	P220	Benämning	Description	Det. nr Part No.	Anmärkning Notes
34	2	2	2	Kulled	Ball joint S	672804-2	Lagerföres ej
34a	2	2	2	. Tätningsring	. Seal ring	672791-1	Alt 1
35	2	2	2	. Gummikåpa	. Rubber boot	672792-9	Alt 1
36	2	2	2	. Låsring	. Circlip	672790-3	Alt 1
37	2	2	2	. Låsring	. Circlip	672789-5	Alt 1
38	2	2	2	Gummikåpa	Rubber boot S	661104-0	Alt 2
39	2	2	2	Vulkollanbricka	Vulcollan washer S	660051-4	Alt 2
40	2	2	2	Smörjnippel	Lubricator S	190317-8	
41	2		2	Gummikåpa	Rubber boot	667039-2	Alt 3
42	2		2	Låsring	Circlip	667040-0	Alt 3
43	2	2	2	Kronmutter	Cap nut S	190142-0	M 12-1,5 Alt
	2			Kronmutter	Cap nut	955884-2	1/2"-20 UNF Alt
			2	Nylockmutter	Nyloc nut	950376-4	1/2"-20 UNF Alt
44	2	2	2	Saxpinne	Split pinr S	907849-4	~~907845~~
45	8	8	8	Skruv	Bolt S	955537-6	~~921845~~
46	8	8	8	Mutter	Nut S	950354-1	~~950394~~
47	8	8	8	Bricka	Washer S	940097-9	
48	1	1	1	Länkarm, nedre, V	Wishbone, lower, L	663661-7	1,2)
	1	1	1	Länkarm, nedre, V	Wishbone, lower, L	671351-5	4)
	1	1	1	Länkarm, nedre, H	Wishbone, lower, R	663662-5	1,3)
	1	1	1	Länkarm, nedre, H	Wishbone, lower, R	671352-3	4)
49	2	2	2	Gummibuffert	Rubber cushion S	83108-1	
50	2	2	2	Konsol	Bracket	653330-1	
51	2	2	2	Mutter	Nut S	955783-6	~~906577~~
52	2	2	2	Fjäderbricka	Spring washer S	955922-0	~~906993~~
53	2	2	2	Skruv	Bolt	192113-9	
54	4	4	4	Gummibussning	Rubber bushing S	663675-7	
55	2	2	2	Bricka	Washer	667792-6	D = 14,5 ~~18702~~
56	2	2	2	Bricka	Washer	667791-8	D = 19,5 ~~80513~~
57	2	2	2	Mutter	Nut	950357-4	~~950407~~
58	2	2	2	Fjäder	Spring	653184-2	
	2	2	2	Mellanlägg	Spacer	672891-9	
59	2	2	2	. Gummimellanlägg	. Rubber spacer	653642-9	
60	2	2	2	. Mellanlägg	. Spacer	653698-1	

1. P 120 ch - 188800 excl 186285-186296, 187421, 188019-188024, 188029, 188041, 188042, 188052-188070, 188168, 188169, 188171, 188172, 188179, 188192-188196, 188202, 188206, 188215-188218, 188221-188317, 188355-188360, 188366-188371, 188379-188381, 188385-188434, 188441-188531, 188534-188597, 188599-188691, 188693-188698, 188700-188759, 188761-188798.
   P 130 ch - 132693 excl 128653-128660, 128999, 129000, 130732, 130970-130976, 131036, 131069, 131124-131176, 131513-131536, 131541, 131547-131549, 131556-131788, 131793, 131794, 131796-131877, 131887-131900, 131903-132000, 132211-132226, 132233-132237, 132241, 132243-132260, 132270-132377, 132380-132526, 132529-132680.
   P 220 ch - 27318 excl 26871, 26997-26999, 27001-27003, 27085-27093, 27101-27109, 27115-27118, 27123, 27128-27145, 27147-27150, 27153-27316.
2. Ers av 1 st 671351-5, 1 st 671353-1.
3. Ers av 1 st 671352-2, 1 st 671353-1.
4. P 120 ch 188801 - incl 186285-186296, 187421, 188019-188024, 188029, 188041, 188042, 188052-188070, 188168, 188169, 188171, 188172, 188179, 188192-188196, 188202, 188206, 188215-188218, 188221-188317, 188355-188360, 188366-188371, 188379-188381, 188385-188434, 188441-188531, 188534-188597, 188599-188691, 188693-188698, 188700-188759, 188761-188798.
   P 130 ch 132694 - incl 128653-128660, 128999, 129000, 130732, 130970-130976, 131036, 131069, 131124-131176, 131513-131536, 131541, 131547-131549, 131793, 131794, 131796-131877, 131887-131900, 131903-132000, 132211-132226, 132233-132237, 132241, 132243-132260, 132270-132377, 132380-132526, 132529-132680.
   P 220 ch 27319 - incl 26871, 26997-26999, 27001-27003, 27085-27093, 27101-27109, 27115-27118, 27123, 27128-27145, 27147-27150, 27153-27316.

Printed in Sweden

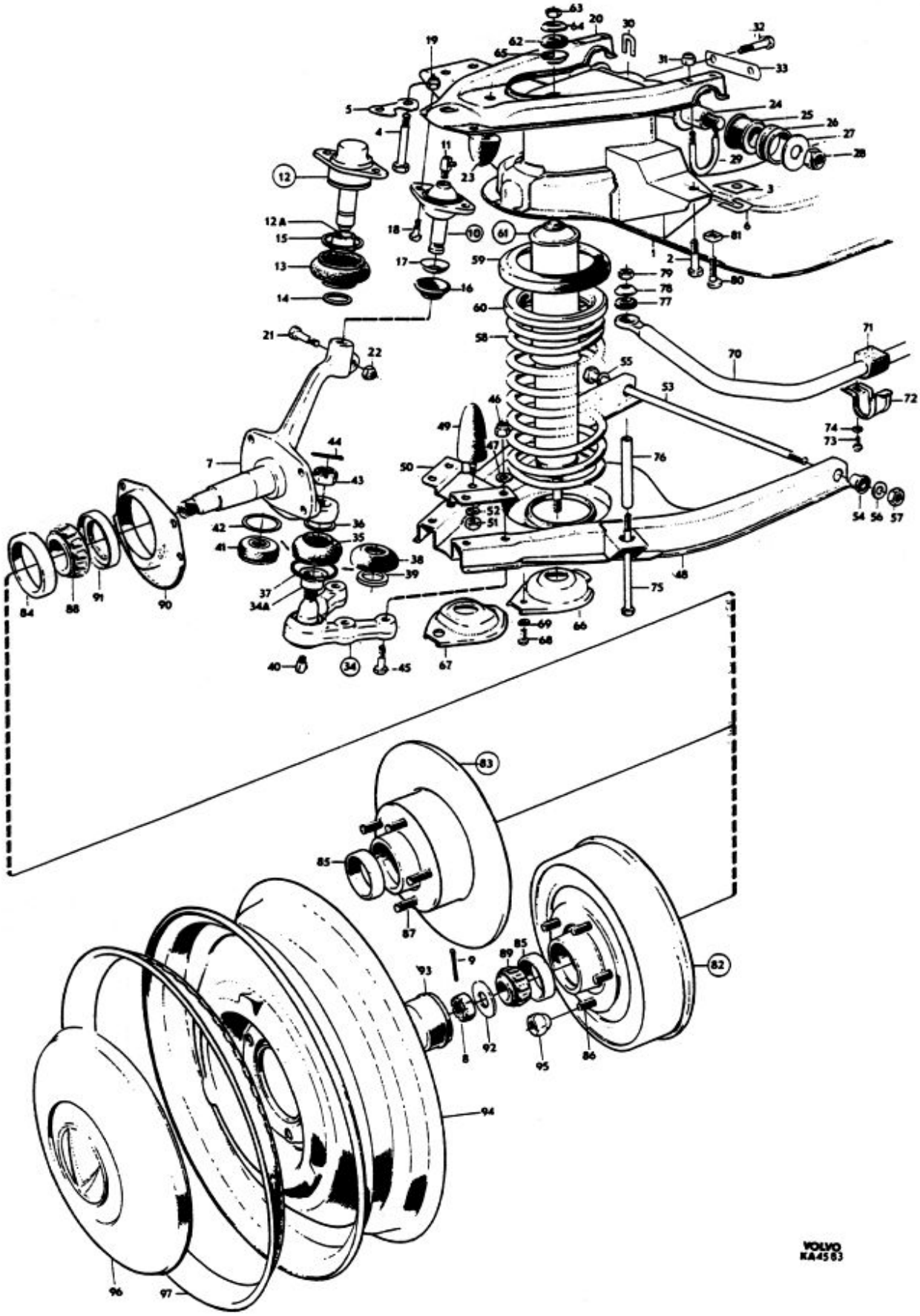
VOLVO
KA4583

P 120 P 130 P 220(B18)

Framaxel, hjul — Front axle, wheels

Pos Fig.	Antal Qty. P 120	P 130	P 220	Benämning	Description	Det. nr Part No.	Anmärkning Notes
61	2	2	2	Stötdämparsats	Shock absorber kit	276479-3	UGT ~~276444~~
		2		Stötdämparsats	Shock absorber kit	276552-7	MGT
	2	2	2	. Stötdämpare	. Shock absorber	S E S	
62	8	8	8	. Bussning	. Bushing	87740-7	
63	4	4	4	. Mutter	. Nut	955848-7	
64	8	8	8	Bricka	Washer	87741-5	
65	4	4	4	Bricka	Washer	89328-9	1)
	2	2	2	Bricka	Washer	89328-9	2)
66	2	2	2	Fäste	Anchorage	660088-6	1) Tid utf
67	2	2	2	Fäste	Anchorage	672228-4	2) Sen utf
68	2	2	2	Skruv, alt 1	Bolt, alt 1	955524-4	l = 19 ~~921823~~
	4	4	4	Skruv, alt 2	Bolt, alt 2	955523-6	l = 16
69	2	2	2	Fjäderbricka	Spring washer	955921-2	d = 8,2 ~~906990~~
	4	4	4	Låsbricka	Lock washer	955949-3	d = 8,3
70	1	1	1	Krängningshämmare	Anti-roll bar	653356-6	
71	2	2	2	Gummibussning	Rubber bushing	657839-7	~~653393~~
72	2	2	2	Klammer	Clamp	653392-1	3)
	2	2	2	Klammer	Clamp	672217-7	4)
73	2	2	2	Skruv, alt 1	Bolt, alt 2	955535-0	l = 32 ~~921843~~
	4	4	4	Skruv, alt 2	Bolt, alt 2	940114-2	l = 22
74	2	2	2	Bricka, alt 1	Washer, alt 1	955950-1	3) ~~951698~~
	4	4	4	Bricka, alt 2	Washer, alt 2	955950-1	4)
75	2	2	2	Skruv	Bolt	106841-0	
76	2	2	2	Distansrör	Spacer tube	654049-6	
77	8	8	8	Gummibussning	Rubber bushing .S	83125-5	
78	8	8	8	Bricka	Washer .S	83126-3	
79	2	2	2	Mutter	Nut .S	955826-3	
80	2	2		Skruv	Bolt	654403-5	
			2	Skruv	Bolt	668810-5	
81	2	2	2	Mutter	Nut	81182-8	
82	2	2	2	Nav	Hub	667126-7	TRB ~~658956~~
83	2	2		Nav	Hub	657879-3	5) SKB
	2	2	2	Nav	Hub	666525-1	6) SKB
84	2	2	2	. Rullager, ytterring	. Roller bearing cup .S	181458-1	SKF: SK-15245 ~~181131~~
85	2	2	2	. Rullager, ytterring	. Roller bearing cup .S	181457-3	SKF: SK-09195 ~~181132~~
86	10	10	10	. Hjulbult	. Wheel stud	654490-2	TRB
87	10	10	10	. Hjulbult	. Wheel stud	657874-4	SKB
88	2	2	2	Rullager, innerring	Roller bearing cone .S	181130-6	SKF: 2K-15112
89	2	2	2	Rullager, innerring	Roller bearing cone .S	18448-1	SKF: 2K-09074
90	2	2	2	Stänkplåt	Splash plate	653821-9	TRB
91	2	2	2	Oljetätning	Oil seal .S	88640-8	
92	2	2	2	Bricka	Washer	87464-4	
93	2	2	2	Fettkapsel	Grease cup	87465-1	

1. P120 ch-193799.
   P130 ch-144399.
   PP220 ch-29399.
2. P120 ch 193800-.
   P130 ch 144400-.
   P220 ch 29400-.
3. P120 ch-214047 excl 211454, 211887-211889, 211900-212621, 212623, 212625-212630, 212632-212639, 212650, 212651, 212653-212661, 212663, 212665-212673, 212675-212683, 212685-214045.
   P130 ch-186486.
   P220 ch-38399 excl 38285, 38380-38387.
4. P120 ch 214048- incl 211454, 211887-211889, 211900-212621, 212623, 212625-212630, 212632-212639, 212650, 212651, 212653-212661, 212663, 212665-212673, 212675-212683, 212685-214045.
   P220 ch 38400- incl 38285, 38380-38387. P130 ch 186487-.
5. P120 ch-118304.
   P130 ch-14342.
6. P120 ch 118305-.
   P130 ch 14343-.

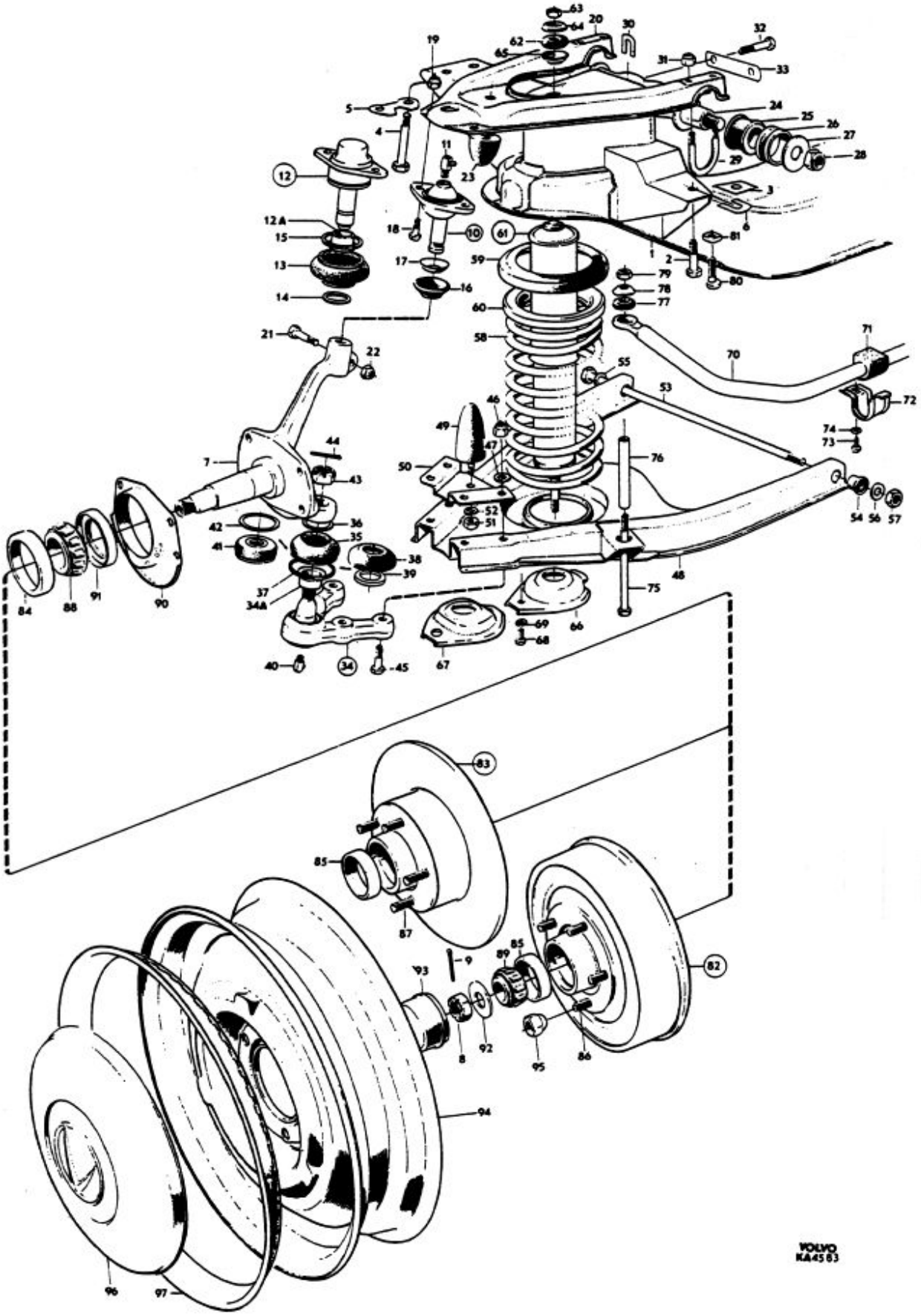
VOLVO
KA4583

P 120 P 130 P 220(B18)

Framaxel, hjul — Front axle, wheels

Pos Fig.	Antal Qty. P 120	P 130	P 220	Benämning	Description	Det. nr Part No.	Anmärkning Notes
94	5	5		Hjul	Wheel	89991-4	1)
	5	5		Hjul	Wheel	670429-0	2)
			5	Hjul	Wheel	662842-4	3)
			5	Hjul	Wheel	670451-4	4)
95	20	20	20	Mutter	Nut	87699-5	
96	4	4	4	Navkapsel	Hub cap	654108-0	1,3)
	4	4	4	Navkapsel	Hub cap	670437-3	2,4)
97	5	5	5	Hjulring	Wheel ring	88754-7	1,3) UGT
		1		Hjulringssats	Wheel trim kit	277584-9	MGT

1. P 120 ch - 166399.
   P 130 ch - 84599.
2. P 120 ch 166400 -.
   P 130 ch 84600 -.
3. P 220 ch - 17949.
4. P 220 ch 17950 -.

Printed in Sweden

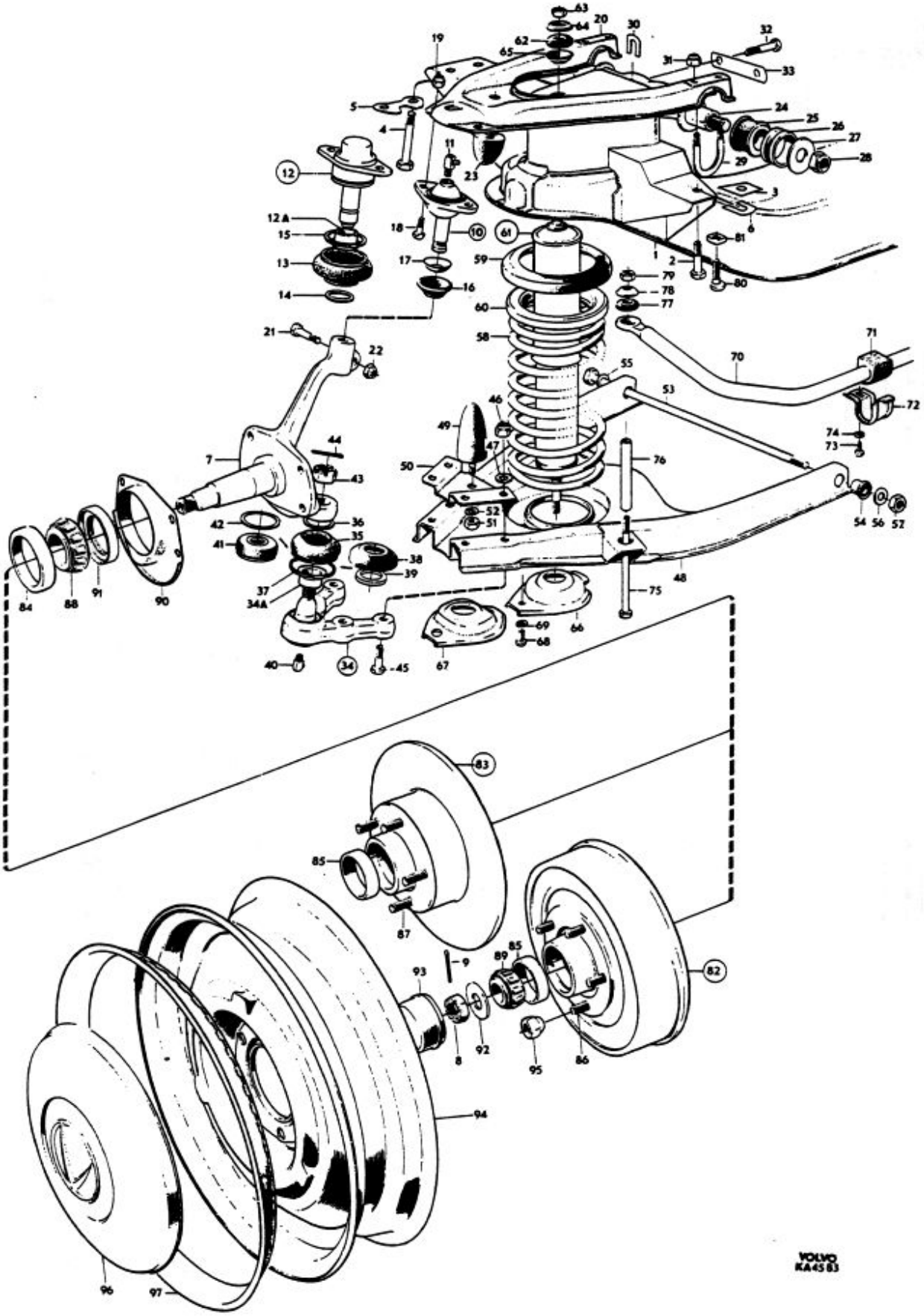
VOLVO
KA4583

P 120 P 130 P 220(B18)

Styrinrättning med monteringsdetaljer — Steering gear and installation components

Pos Fig.	Antal Qty. P120	P130	P220	Benämning	Description	Det. nr Part No.	Anmärkning Notes
1	1	1	1	Styrinrättning	Steering gear	250085-8	1,2) Vst ~~250100~~
	1	1	1	Styrinrättning	Steering gear	250086-6	1) Hst
		1	1	Styrinrättning	Steering gear	250135-1	3,4) Vst ~~250138~~
		1	1	Styrinrättning	Steering gear	250136-9	3) Hst
				. Det se sida 14	. Components, see page 14		
2	1	1	1	Rattstång	Steering shaft	660696-6	
3	1	1	1	Medbringare	Companion flange	663784-7	~~654383~~
4	1	1	1	Skruv	Bolt	940162-1	~~921844~~
5	1	1	1	Mutter	Nut	950354-1	~~950394~~
6	1	1	1	Kopplingsskiva	Connecting disc	653989-3	5,6)
	1	1	1	Kopplingsskiva	Connecting disc	669870-8	1,2) 7)
7	4	4	4	Distanshylsa	Spacer sleeve	669871-6	7)
8	4	4	4	Skruv	Bolt	940159-7	~~101988~~
9	4	4	4	Bricka	Washer	654649-3	
10	4	4	4	Mutter	Nut	950353-3	~~950393~~
11		1	1	Rattstång	Steering shaft	673036-0	
12		2	2	Bussning	Bushing	673060-0	
13		2	2	Mutter	Nut	950353-3	
14		1	1	Medbringare	Companion flange	673039-4	3,4)
15		1	1	Skruv	Screw	943038-0	~~955535~~
16		1	1	Låsbricka	Lock washer	955950-1	
17		2	3	Bricka	Washer	955904-8	
18	1	1		Ratrör	Column tube	659368-5	GV
19	1			Ratrör	Column tube	663320-0	Vst RV
		1		Ratrör	Column tube	666261-3	Hst RV
20	1	1		Ratrör	Column tube	670115-5	Vst BW35
	1			Ratrör	Column tube	671023-0	Hst BW35
21	2	2	2	Kullager	Ball bearing	85611-2	
22	2	2	2	Fjäder	Spring	85612-0	
23	2	2	2	Säte	Seat	85613-8	
24	1	1		Pitmanarm	Drop arm	660685-9	8) Vst
	1	1	1	Pitmanarm	Drop arm	666349-6	9) Vst
	1	1		Pitmanarm	Drop arm	660686-7	10) Hst
	1	1	1	Pitmanarm	Drop arm	666350-4	11) Hst
25	1	1	1	Mutter	Nut	950389-7	
26	3	3	3	Skruv	Bolt	942547-1	~~192498~~
27	3	3	3	Bricka	Washer	192495-0	
28	3	3	3	Mutter	Nut	950354-1	~~950394~~

1. P130 ch-279899. P220 ch-61799.
2. P130 USA ch-262714 excl 258799.
   P220 USA ch-56879 excl 56029.
3. P130 ch 279900-. P220 ch 61800-.
4. P130 USA ch 262715-. incl 258799.
   P220 USA ch 56880- incl56029.
5. P120 ch-135181. P130 ch-31431 excl 31313. P220 ch-6655 excl 6641.
6. Ers av: 1 st 669870-8, 4 st 669871-6.
7. P120 ch 135182-. P130 ch 31432- incl 31313. P220 ch 6656- incl 6641.
8. P120 ch-97700 excl 97448-97462, 97467-97513, 97527-97582, 97637-97641, 97654-97677. P130 ch-2012.
9. P120 ch 97701- incl 97448-97462, 97467-97513, 97527-97582, 97637-97641, 97654-97677. P130 ch 2013-.
10. P120 ch-99928. P130 ch-2229.
11. P120 ch 99929-. P130 ch 2230-.

Printed in Sweden

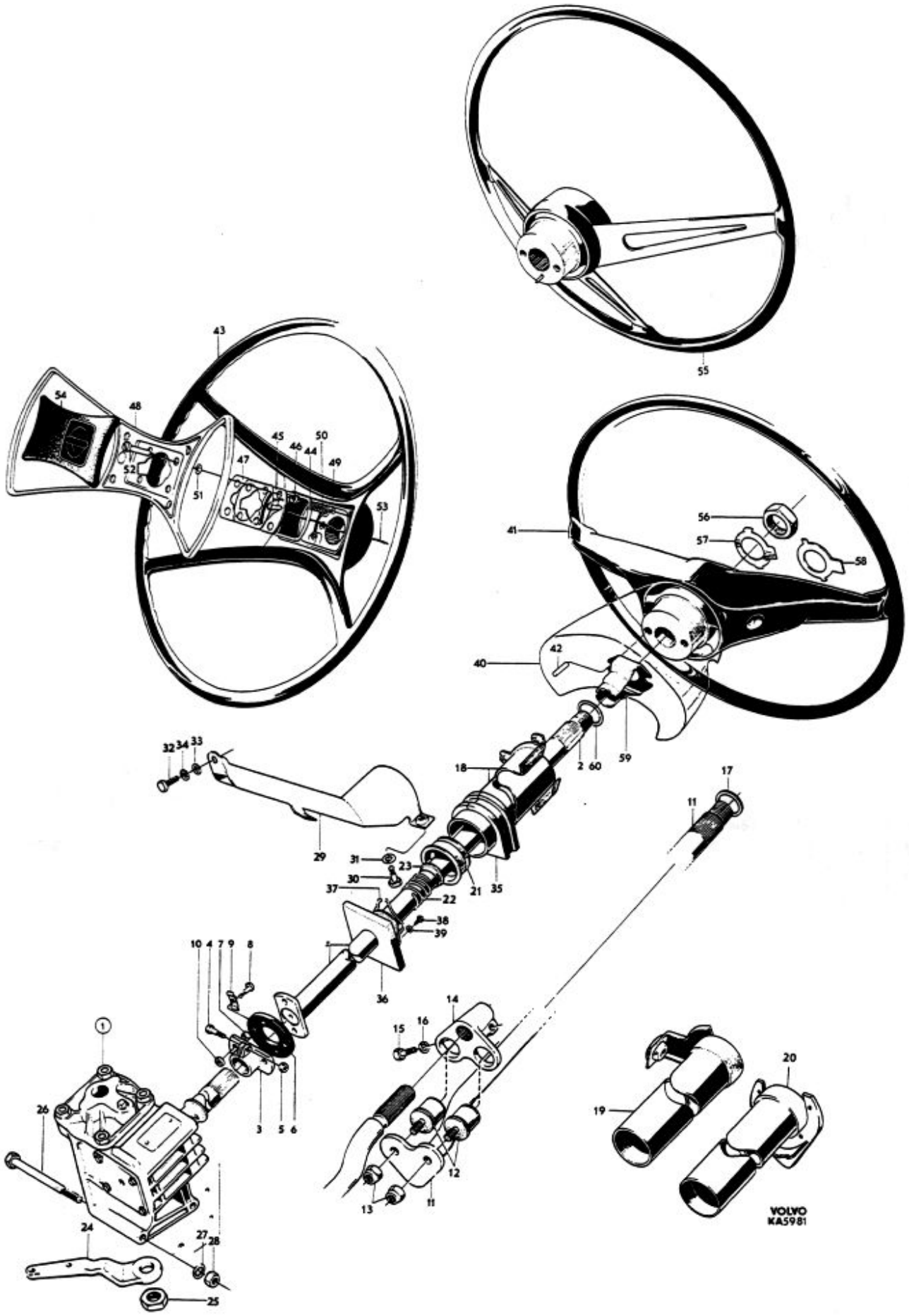
VOLVO
KA5981

P 120 P 130 P 220(B18)

Styrinrättning med monteringsdetaljer — Steering gear and installation components

Pos Fig.	Antal Qty. P120	P130	P220	Benämning	Description	Det. nr Part No.	Anmärkning Notes
29	1	1	1	Stag	Stay	673646-6	~~662468~~ ~~672622~~
30	2	2	2	Skruv	Bolt	955524-4	5/16"-18UNC
31	2	2	2	Bricka	Washer	120096-3	~~11962~~
32	1	1	1	Skruv	Bolt	940100-1	1/4"-20UNC
33	1	1	1	Bricka	Washer	192287-1	~~120095~~
34	1	1	1	Fjäderbricka	Spring washer	955920-4	~~906988~~
35	1	1	1	Gummibussning	Rubber bushing	659365-1	
36	1	1	1	Tätningskrage	Sealing collar	654011-6	
37	1	1	1	Klammer	Clamp	668648-9	~~653632~~
38	1	1	1	Skruv	Screw	955137-5	
39	1	1	1	Bricka	Washer	940090-4	
40				Hus	Housing		Se grupp 3
41	1	1	1	Ratt	Steering wheel	670003-3	1) UGT ~~653970~~
42	1	1	1	. Räffelpinne	. Grooved straight pin	951124-7	
43		1	1	Ratt	Steering wheel	673422-2	UGT
44		1	1	. Kontaktring	. Contact ring	673530-2	
45		1	1	. Kontaktbricka	. Contact washer	673533-6	
46		4	4	. Isolerbussning	. Insulating bushing	673521-1	
47		1	1	. Isolerbricka	. Insulating washer	673534-4	2)
48		1	1	. Signalring	. Horn ring	673531-0	
49		4	4	. Taggbricka	. Tag washer	673524-5	
50		4	4	. Tryckfjäder	. Thrust spring	673523-7	
51		4	4	. Bricka	. Washer	673520-3	
52		4	4	. Ansatsskruv	. Stop screw	673519-5	
53				Signalledning	Horn cable		Se grupp 3
54		1	1	Stötskydd	Shock guard	673535-1	2)
55		1		Ratt	Steering wheel	672596-4	MGT
		1		Räffelpinne	Grooved straight pin	951124-7	Se pos 42
56	1	1	1	Mutter	Nut	80544-0	Alt 1. N = 32
		1	1	Mutter	Nut	943078-2	Alt 2. N = 27
57	1	1	1	Låsbricka	Lock washer	659537-5	Alt 1
58	1	1	1	Låsbricka	Lock washer	671430-7	Alt 2 ~~658371~~
59	1	1	1	Medbringare	Companion flange	672115-3	~~659367~~
60	erf	erf	erf	Bricka	Washer	191622-0	

1. P130 ch-279899. P220 ch-61799.
2. P130 ch 279900-. P220 ch 61800-.

Printed in Sweden

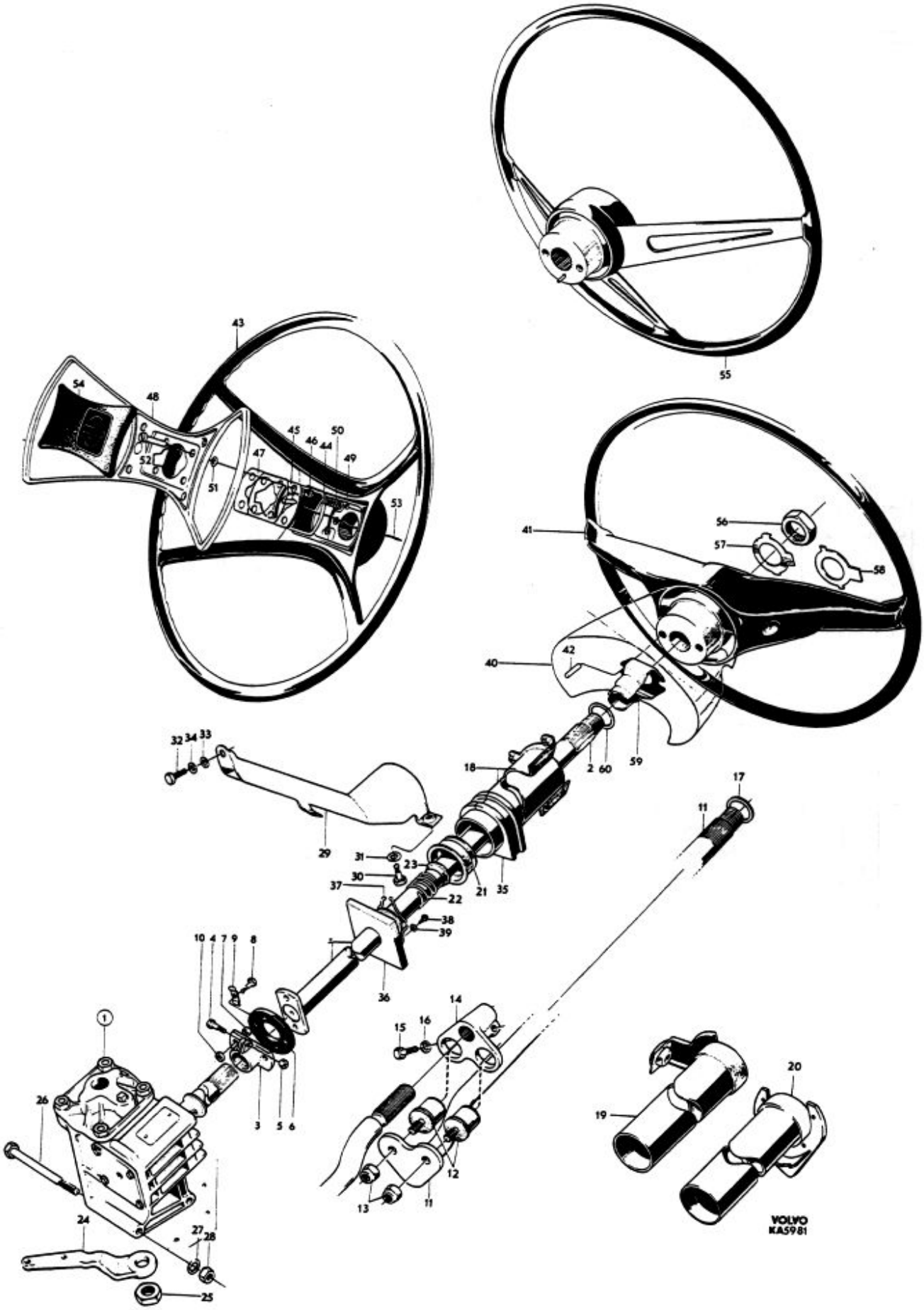
VOLVO
KA5981

P 120 P 130 P 220(B18)

Styrinrättning — Steering gear

Pos Fig.	Antal Qty. 250085 ~~250100~~	250086	250135 ~~250130~~	250136	Benämning	Description	Det. nr Part No.	Anmärkning Notes
1	1				Styrinrättning	Steering gear	250085-8	~~250100~~
		1			Styrinrättning	Steering gear	250086-6	
			1		Styrinrättning	Steering gear	250135-1	~~250130~~
				1	Styrinrättning	Steering gear	250136-9	
2	1		1		. Hus	. Housing	662345-8	
		1		1	. Hus	. Housing	662346-6	
3	2	2	2	2	. . Bussning	. . Bushing .....S	85627-8	
4	1	1	1	1	. . Tätningsring	. . Seal ring .....S	114271-0	
5	1	1	1	1	. . Tätningsring	. . Seal ring .....S	678249-4	~~190764~~
6	1	1	1	1	. Lock	. Cover	659214-1	
7	1	1	1	1	. Propp	. Plug	180764-3	
8	1	1	1	1	. Packning	. Gasket .....S	656704-4	
9	4	4	4	4	. Skruv	. Screw	190767-4	~~190765~~
10	4	4	4	4	. Bricka	. Washer .....S	86284-7	
11	1	1	1	1	. Lock	. Cover	656705-1	
12	1	1	1	1	. Bricka	. Washer	656706-9	
13	erf	erf	erf	erf	. Justermellanlägg, tj = 0,10	. Shim, Th = 0.10 .....S	656707-7	
	erf	erf	erf	erf	tj = 0,12	Th = 0.12 .....S	656708-5	Alt
	erf	erf	erf	erf	tj = 0,15	Th = 0.15	656709-3	
	erf	erf	erf	erf	tj = 0,30	Th = 0.30	656710-1	
14	2	2	2	2	. Skruv	. Screw	190767-4	l = 25
15	2	2	2	2	. Fjäderbricka	. Spring washer .....S	955921-2	~~906990~~
16	2	2	2	2	. Skruv	. Screw	190768-2	l = 18
17	2	2	2	2	. Låsbricka	. Lock washer .....S	190296-4	
18	1				. Rattaxel	. Steering shaft	662347-4	
		1			. Rattaxel	. Steering shaft	662348-2	
			1		. Rattaxel	. Steering shaft	673042-8	
				1	. Rattaxel	. Steering shaft	673078-2	
19	1	1	1	1	. Kullagerring	. Ball bearing race	85616-1	
20	1	1	1	1	. Kullagerring	. Ball bearing race	85617-9	
21	2	2	2	2	. Kulring	. Ball race	85618-7	
22	1		1		. Utgående axel	. Drop arm shaft	662349-0	
		1		1	. Utgående axel	. Drop arm shaft	662350-8	
23	1	1	1	1	. . Justerskruv	. . Adjuster screw	659218-2	
24	1	1	1	1	. . Justerbricka, tj = 2,20	. . Adjuster washer, Th = 2.20	659219-0	
	1	1	1	1	tj = 2,25	Th = 2.25	659220-8	
	1	1	1	1	tj = 2,30	Th = 2.30	659221-6	Alt
	1	1	1	1	tj = 2,35	Th = 2.35	659222-4	
	1	1	1	1	tj = 2,40	Th = 2.40	659223-2	
	1	1	1	1	tj = 2,45	Th = 2.45	659224-0	
25	1	1	1	1	. . Låsring	. . Circlip	659225-7	
26	1	1	1	1	. Låsmutter	. Lock nut	150203-8	

Printed in Sweden

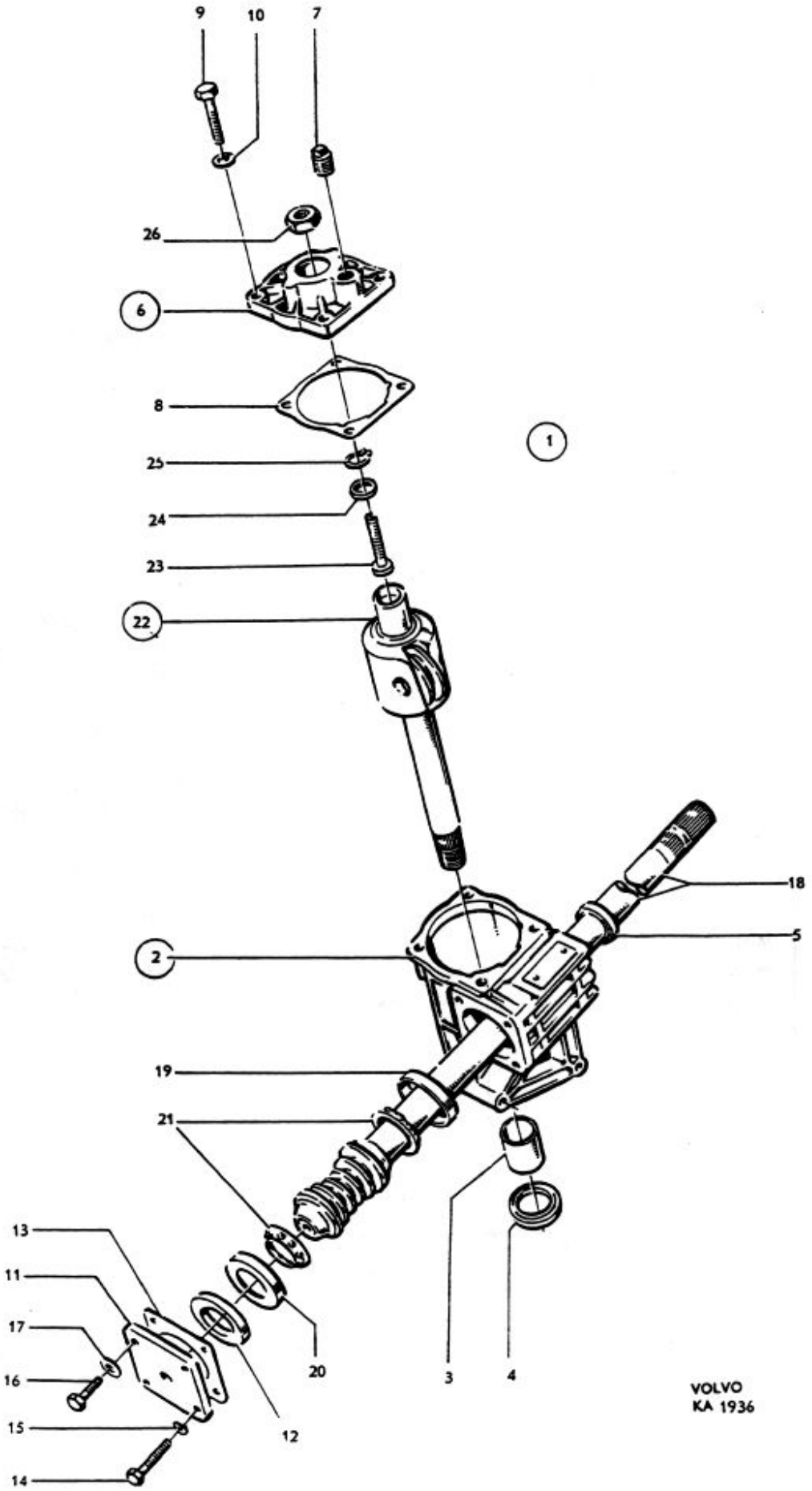
9
10
7
26
6
8
1
25
24
23
22
18
5
2
19
21
13
11
17
16
15
14
20
12
3
4
VOLVO
KA 1936

P 120 P 130 P 220(B18)

Parallellstag — Tie rod

Pos Fig.	Antal Qty. P 120	P 130	P 220	Benämning	Description	Det. nr Part No.	Anmärkning Notes
1	1	1	1	Parallellstag	Tie rod	660979-6	D = 20
	1	1		Parallellstag	Tie rod	661934-0	1,2) D = 14,9
				. Det se sida 20	. Components, see page 20		
2	1	1		Mellanarm, kmpl	Steering idler arm, cpl	663627-8	3) Vst
	1	1		Mellanarm, kmpl	Steering idler arm, cpl	663628-6	4) Hst
3	1	1		. Mellanarm	. Steering idler arm	660687-5	Vst
	1	1		. Mellanarm	. Steering idler arm	660688-3	Hst
4	1	1		. Konsol	. Bracket	656464-5	Vst
	1	1		. Konsol	. Bracket	656465-2	Hst
5	1	1		. Axel	. Shaft .....S	663606-2	
6	2	2		. Nållager	. Needle bearing .....S	192100-6	
7	2	2		. Tätningsring	. Seal ring .....S	663625-2	
8	2	2		. Vulkollanbricka	. Vulcollan washer .....S	656729-1	
9	erf	erf		. Justermellanlägg, tj = 0,10 ..	. Shim, Th = 0.10 .....S	190702-1	
	erf	erf		tj = 0,35 ..	Th = 0.35 .....S	190711-2	
10	1	1		. Bricka	. Washer .....S	190782-3	
11	1	1		. Mutter	. Nut .....S	950366-5	
12	1	1		. Saxpinne	. Split pin .....S	907849-4	~~907845~~
13	1	1	1	Mellanarm, kmpl	Steering idler arm, cpl	666355-3	5,7) Vst
	1	1	1	Mellanarm, kmpl	Steering idler arm, cpl	666356-1	6,8) Hst
14	1	1	1	. Mellanarm	. Steering idler arm	666351-2	Vst
	1	1	1	. Mellanarm	. Steering idler arm	666352-0	Hst
15	1	1	1	. Konsol	. Bracket	666353-8	
16	2	2	2	. . Bussning	. . Bushing .....S	663709-4	
17	1	1	1	. Axel	. Shaft .....S	666402-3	
18	2	2	2	. Vulkollanbricka	. Vulcollan washer .....S	669255-2	~~663708~~
19	erf	erf	erf	. Justermellanlägg, tj = 0,10 ..	. Shim, Th = 0.10 .....S	190702-1	
	erf	erf	erf	tj = 0,15 ..	Th = 0.15 .....S	192490-1	
	erf	erf	erf	tj = 0,35 ..	Th = 0.35 .....S	190711-2	
20	1	1	1	. Bricka	. Washer .....S	192477-8	
21	1	1	1	. Mutter	. Nut	950356-6	9) 1/2"-13 UNC-15,8
	1	1	1	. Mutter	. Nut .....S	950406-9	1/2"-13 UNC-11,4
22	1	1	1	. Spårryttare	. Lock washer .....S	951670-9	10)
23	1	1	1	. Smörjnippel	. Lubricator .....S	914170-6	

1. P 120, P130. Ers av: 1st 660979-6, 2st 190573-6.
2. Förekommer på ett antal vagnar inom svenska marknaden.
   Only appears on a limited number of vehicles, which are running on the Swedish market.
3. P 120 ch-97700 excl 97448-97462, 97467-97513, 97527-97582, 97637-97641, 97654-97677.
   P 130 ch-2012.
4. P 120 ch-99928. P 130 ch-2229.
5. P 120 ch 97701-193799 incl 97448-97462, 97467-97513, 97527-97582, 97637-97641, 97654-97677.
   P 130 ch 2013-144399.
   P 220 ch-29399.
6. P 120 ch 99929-193799.
   P 130 ch 2230-144399.
   P 220 ch-29399.
7. Ers av: 1st 671454-7.
8. Ers av: 1st 671455-4.
9. Sen utf.
10. Tid utf.

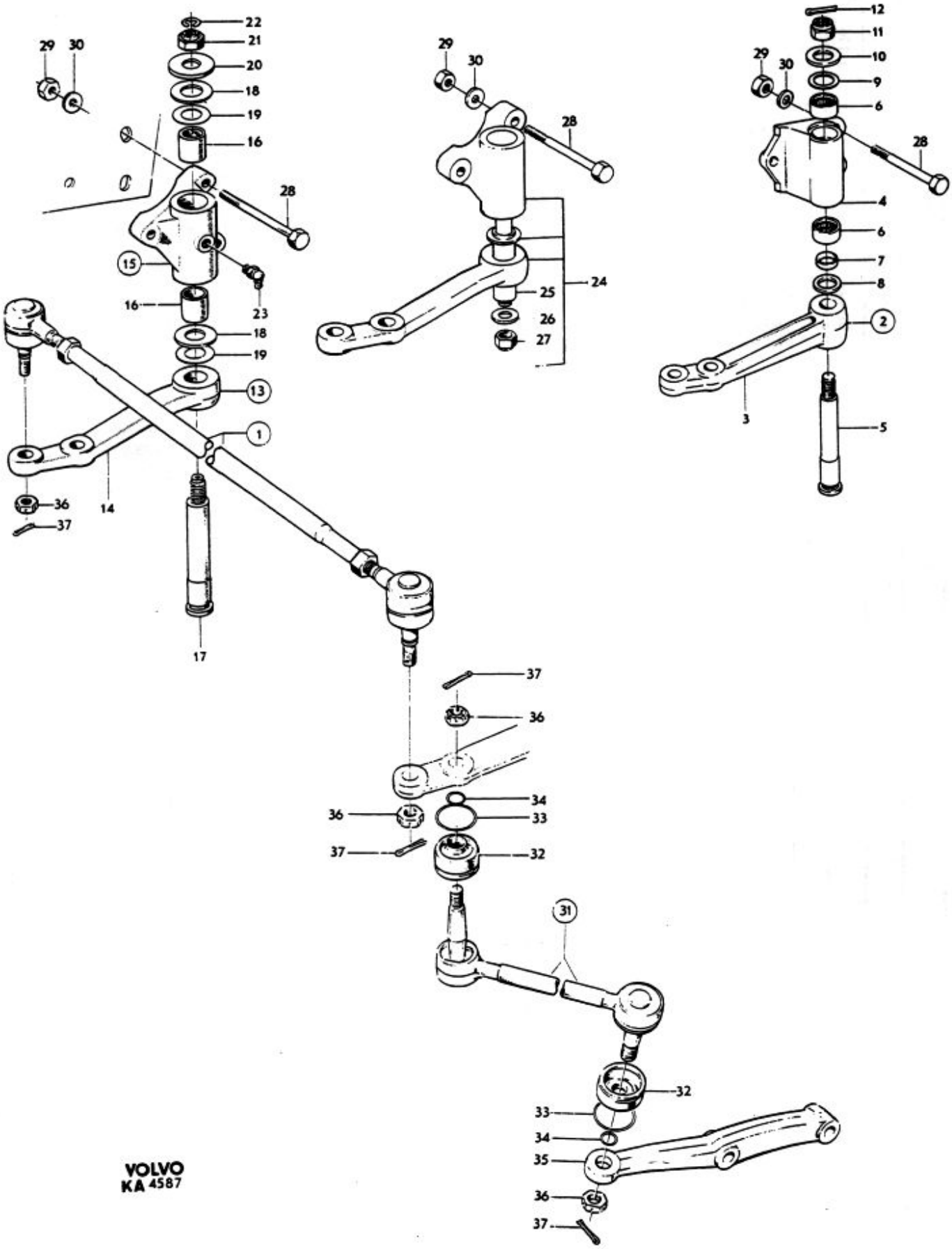
22
21
20
18
19
16
29
30
28
15
23
16
18
19
13
1
36
37
14
17
29
30
28
24
25
26
27
12
11
10
9
6
29
30
28
4
6
7
8
2
3
5
37
36
34
36
33
37
32
31
32
33
34
35
36
37
VOLVO
KA 4587

P 120 P 130 P 220(B18)

Parallellstag — Tie rod

Pos Fig.	Antal Qty. P 120	P 130	P 220	Benämning	Description	Del. nr Part No.	Anmärkning Notes
24	1	1	1	Mellanarm	Steering idler arm	671454-7	1) Vst
	1	1	1	Mellanarm	Steering idler arm	671455-4	1) Hst
25	1	1	1	. Bussning	. Bushing	671444-8	
26	1	1	1	. Bricka	. Washer	960145-1	
27	1	1	1	. Mutter	. Nut	950356-6	
28	3	3	3	Skruv	Bolt	955542-6	2) Alt 1, l = 83
	3	3	3	Skruv	Bolt	955543-4	2) Alt 2, l = 95
	3	3	3	Skruv	Bolt	942529-9	1) ~~102921-~~
29	3	3	3	Mutter	Nut	950354-1	~~950394~~
30	3	3	3	Bricka	Washer	192495-0	
31	1	1	1	Styrstång, V	Steering rod, L	658596-2	
	1	1	1	Styrstång, H	Steering rod, R	658597-0	
32	4	4	4	. Gummikåpa	. Rubber casing	670877-0	~~660007~~
33	4	4	4	. Låsring	. Lock ring	670420-9	~~660008~~
34	4	4	4	. Spännring	. Tensioner ring	672785-3	~~670870~~
	4	4	4	Gummikåpa (bälgtätning)	Rubber casing (concertina seal)	661942-3	3)
	4	4	4	Låsring	Lock ring	680071-8	3)
35	1	1	1	Styrarm, V	Steering arm, L	653033-1	
	1	1	1	Styrarm, H	Steering arm, R	653034-9	
36	6	6	6	Mutter	Nut	190573-6	M10 x 1
	6	6	6	Mutter	Nut	955835-4	3/8"-18 UNF ~~951744~~
37	6	6	6	Saxpinne	Split pin	907824-7	

1. P 120 ch 193800 -.
   P 130 ch 144400 -.
   P 220 ch 29400 -.
2. P 120 ch - 193799.
   P 130 ch - 144399.
   P 220 ch - 29399.
3. Monteras i samband med styrstång vars kulled har tumgänga. Förekommer på ett antal vagnar inom svenska marknaden.
   Installed in conjunction with a steering rod of which the ball joint has inch threading. Only appears on a number of vehicles running on the Swedish market.

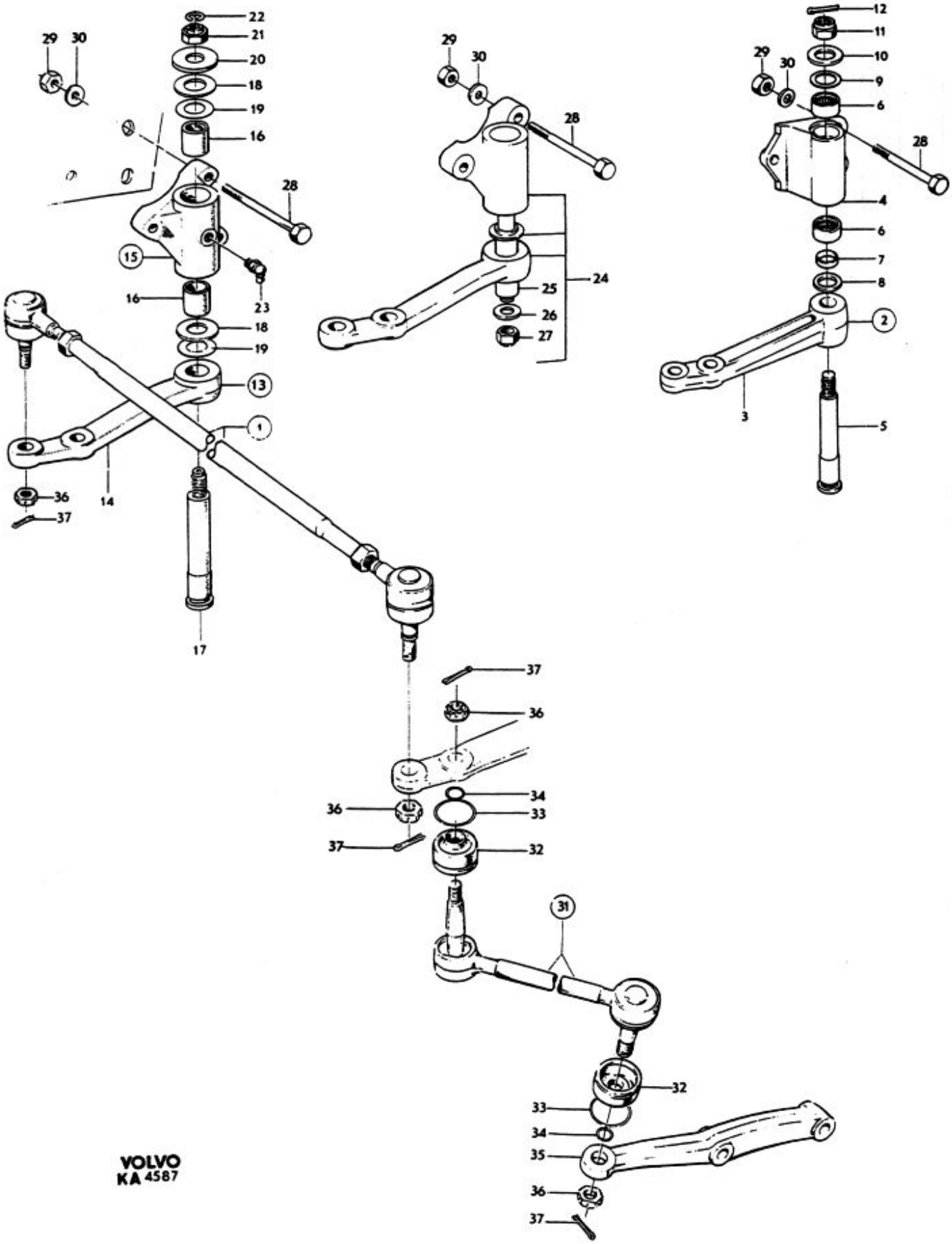
22
21
20
18
19
16
29
30
28
15
23
16
18
19
13
1
14
36
37
17
29
30
28
25
24
26
27
12
11
10
9
6
29
30
28
4
6
7
8
2
3
5
37
36
34
36
33
37
32
31
32
33
34
35
36
37

P 120 P 130 P 220(B18)

Parallellstag — Tie rods

Pos Fig.	Antal Qty. 660979	Antal Qty. 661934	Benämning	Description	Det. nr Part No.	Anmärkning Notes
1	1		Parallellstag	Tie rod	660979-6	
		1	Parallellstag	Tie rod	-	Lagerföres ej
2	1		. Rör	. Tube	661232-9	D = 20
3		1	. Rör	. Tube	661936-5	D = 14,9
4	1		. Kulled, V	. End, L	658431-2	
	1		. Kulled, H	. End, R	658432-0	
5		1	. Kulled, V	. End, L	661938-1	
		1	. Kulled, H	. End, R	661939-9	
6	2		. . Gummikåpa	. . Rubber casing	670877-0	660007
7	2		. . Låsring	. . Circlip	670420-9	660008
8	2		. . Spännring	. . Tensioner ring	672785-3	670878
9		2	. . Gummikåpa (bälgtätning)	. . Rubber casing (concertina seal)	661942-3	
10		2	. . Låsring	. . Circlip	680071-8	
11	1		. Mutter (v-gängad)	. Nut (LH thread)	661288-1	M 14 x 1,5
	1		. Mutter (h-gängad)	. Nut (RH thread)	661289-9	M 14 x 1,5
12		1	. Mutter (v-gängad)	. Nut (LH thread)	190679-1	5/8"-18 UNF
		1	. Mutter (h-gängad)	. Nut (RH thread)	940152-2	5/8"-18 UNF ~~951758~~

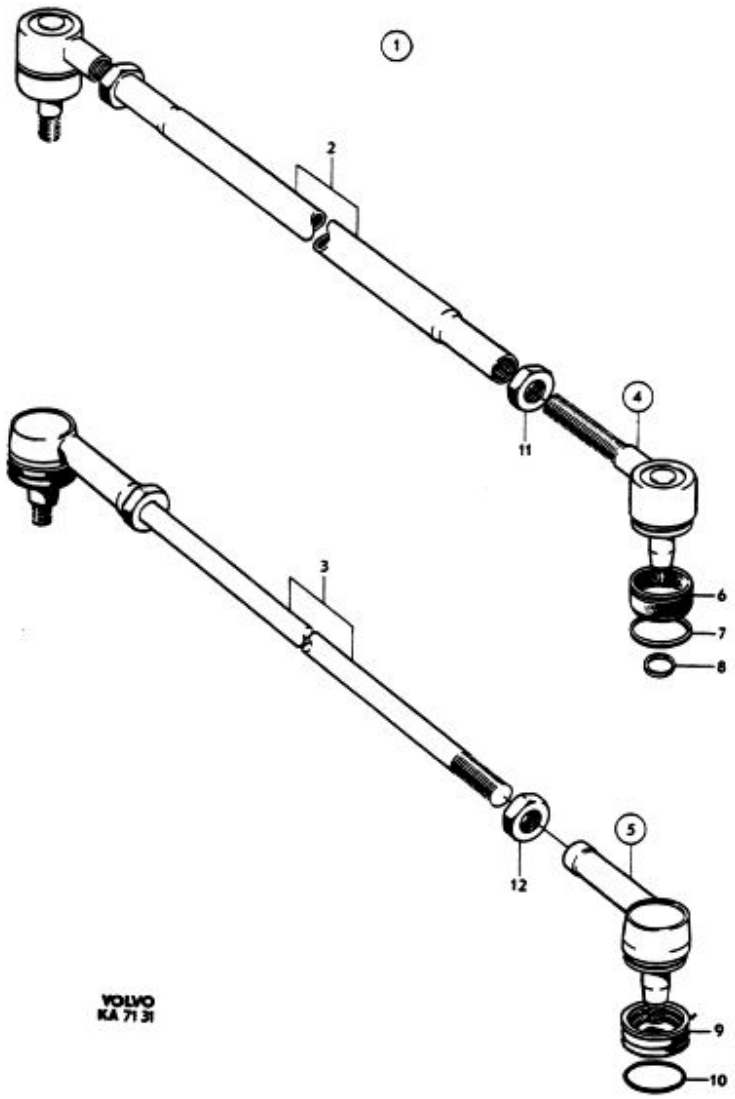

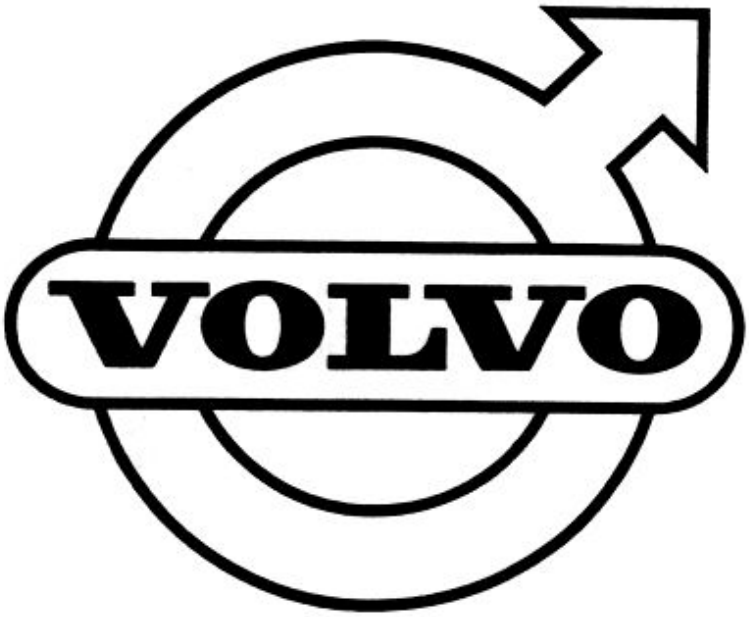
VOLVO